CA30 Series Non-solid Electrolytic Tantalum Capacitor

Brief Introduction

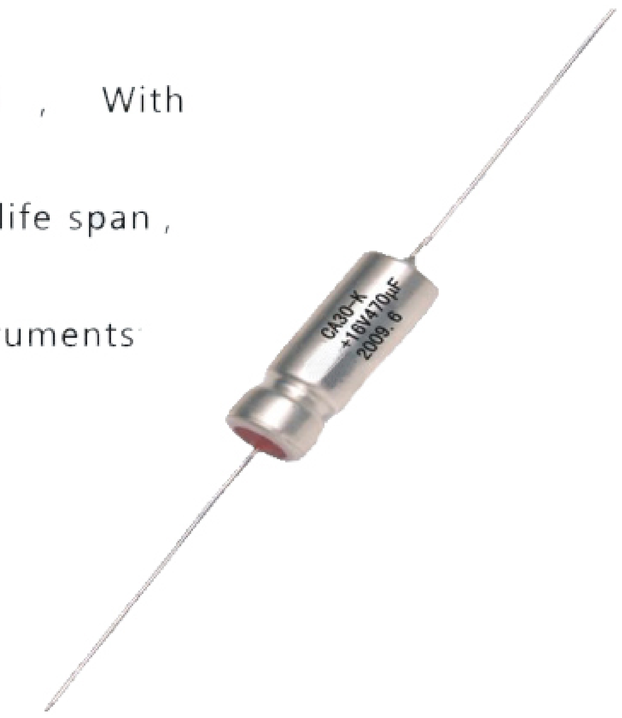

- Silver case encapsulation, Epoxy end-filled, Tubular, Axial-lead, With insulation sleeve;
- Excellent in electrical performances, High reliability, Low DCL, Long life span, Meets SJ/T10030-91(Industry standard), Small in case for easy using;
- Applicable to DC&Pulse current of communications-equipments and instruments
- Executive Standard: QJ/PWV139-2003;

Features

- Operaing Temperature Range:-55℃~+125℃ (>85℃ with rated voltage derating) ;
- Rated Voltage, Derating Voltage, Nominal Capacitance: See figure 2;
- Capacitance tolerance: K : ±10%; M : ±20%;
- DC leakage: At+20℃, $I_0 \leq 0.001 C_R U_R$ (μA) or 1μA (Choose the greater one)
  At+85℃ or +125℃ , $I \leq 0.008\ C_R U_R$ (μA) or 8μA (Choose the greater one) ;
- Dissipation Factors: Not exceed the parameter in table2;
- ESR of Negative Temperature: Not exceed the parameter in table2;
- Dimensions & Max Weight : See Table 1 & Figure 1;

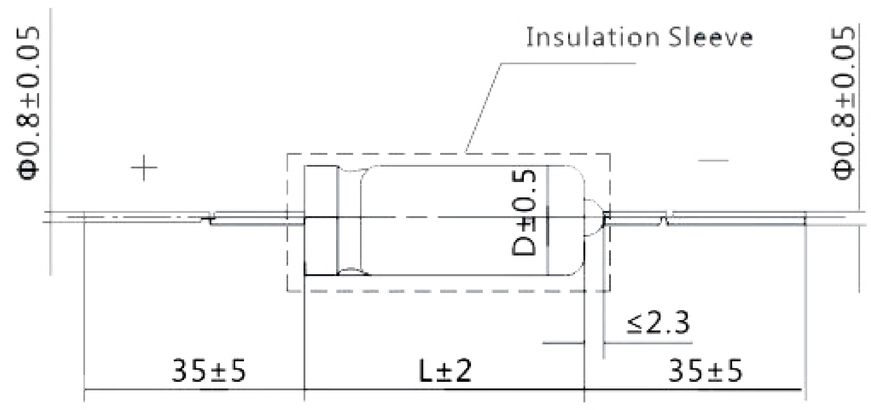

Tableimensions and Max Weight Aslshown in Table1 and Figure 1

Case Code	Max Weight(g)	Dimensions	
		D±0.5	L±2
0	3	5	10
1	4	5	14
2	5	6	16
3	7	8	16
4	10	8	22
5	14	10	22
6	17	10	25
7	20	10	30
8	23	10	33

P.S. The CA30 products with insulation D could be 0.4mm more at most, L could be 1.6mm more at most.

Table 2 Electrical Characteristics

Rated Voltage	Derating Voltage	Case Code	Nominal Capacitance C_R (μF)	tgδ(%) MAX 25℃ 85℃ 125℃	(Ω) ESR 100Hz
6.3	4	0	1.0	6	1800
		0	1.5	6	1400
		0	2.2	6	1100
		0	3.3	6	700
		0	4.7	6	500
		0	6.8	8	350
		0	10	8	260
		0	15	10	200
		0	22	10	180
		0	33	12	125
		0	47	15	125
		0	68	18	125
		0	100	20	100
		1	150	30	80
		1	220	40	70
		2	330	40	60
		2	470	50	50
		3	680	50	35
		3	1000	60	25
		4	1200	60	25
		4	1500	60	20
		5	2200	70	20
		6	3300	80	15
10	6.3	0	1.0	6	1800
		0	1.5	6	1400
		0	2.2	6	1100
		0	3.3	6	700
		0	4.7	6	500
		0	6.8	8	350
		0	10	8	250
		0	15	10	200
		0	22	10	175
		0	33	12	125
		0	47	15	100

U_R(V) Rated Voltage	U_C(V) Derating Voltage	Case Code	Nominal Capacitance C_R (μF)	tgδ(%) MAX 25℃ 85℃ 125℃	(Ω) ESR 100Hz
10	6.3	0	68	18	80
		0	100	20	60
		1	150	30	55
		2	220	40	45
		2	330	45	40
		3	470	50	35
		3	680	50	30
		4	1000	50	25
		4	1200	60	25
		5	1500	60	20
		6	2200	70	20
16 (15)	10	0	1.0	6	1800
		0	1.5	6	1400
		0	2.2	6	1100
		0	3.3	6	700
		0	4.7	6	500
		0	6.8	8	350
		0	10	8	260
		0	15	10	180
		0	22	10	150
		0	33	12	110
		0	47	12	90
		0	68	18	80
		1	100	20	70
		2	150	30	60
		2	220	40	55
		3	330	40	45
		4	470	40	40
		5	680	45	35
		6	1000	50	30
		6	1200	50	25
		7	1500	60	20
25	16	0	1.0	6	1800
		0	1.5	6	1400

(add) Table 2 Electrical Characteristics

U_R(V) Rated Voltage	U_C(V) Derating Voltage	Case Code	Nominal Capacitance C_R (μF)	tgδ(%) MAX 25℃ 85℃ 125℃	(Ω) ESR 100Hz
25	16	0	2.2	6	1100
		0	3.3	6	700
		0	4.7	6	500
		0	6.8	8	300
		0	10	8	260
		0	15	10	175
		0	22	10	150
		0	33	12	110
		0	47	12	80
		1	68	20	75
		2	100	20	70
		3	150	25	60
		3	220	30	55
		4	330	30	45
		5	470	40	40
		6	680	40	35
		7	1000	40	30
		7	1200	50	25
		8	1500	60	20
40	25	0	1.0	6	1800
		0	1.5	6	1400
		0	2.2	6	1100
		0	3.3	6	700
		0	4.7	6	450
		0	6.8	8	350
		0	10	8	260
		0	15	10	175
		0	22	12	140
		1	33	12	110
		2	47	15	80
		2	68	15	75
		2	100	20	65
		3	150	20	50
		4	220	25	45

U_R(V) Rated Voltage	U_C(V) Derating Voltage	Case Code	Nominal Capacitance C_R (μF)	tgδ(%) MAX 25℃ 85℃ 125℃	(Ω) ESR 100Hz
40	25	5	330	25	35
		5	350	25	35
		5	470	30	35
		6	680	40	30
		7	1000	45	30
		8	1200	50	25
50	30	0	1.0	6	1800
		0	1.5	6	1400
		0	2.2	6	1100
		0	3.3	6	700
		0	4.7	6	500
		0	6.8	8	350
		0	10	8	260
		0	15	10	175
		1	22	12	150
		2	33	12	110
		2	47	15	80
		3	68	15	75
		3	100	20	65
		4	150	20	50
		4	220	25	45
		5	330	25	45
		6	470	35	35
		7	680	40	30
		8	1000	50	30
63	40	0	1.0	6	1800
		0	1.5	6	1400
		0	2.2	6	1100
		0	3.3	6	700
		0	4.7	6	500
		0	6.8	8	350
		0	10	8	260
		1	15	10	175
		2	22	12	140

(add) Table 2 Electrical Characteristics

U_R(V) Rated Voltage	U_C(V) Derating Voltage	Case Code	Nominal Capacitance C_R (μF)	tgδ(%) MAX 25℃ 85℃ 125℃	(Ω) ESR 100Hz
63	40	2	33	12	100
		2	47	15	80
		3	68	15	65
		3	100	20	60
		4	150	20	50
		5	220	25	45
		6	330	25	35
75 (70)	50	7	470	40	30
		0	1.0	6	1800
		0	1.5	6	1400
		0	2.2	6	1100
		0	3.3	6	700
		0	4.7	6	500
		1	6.8	8	350
		1	10	8	260
		2	15	10	175
		2	22	12	150
		3	33	12	110
		3	47	15	80
		4	68	15	70
		4	100	20	60
		5	150	20	50
		6	220	25	45
100 (90)	63	7	330	25	35
		0	1.0	6	1800
		0	1.5	6	1400
		0	2.2	6	1100
		0	3.3	6	700

U_R(V) Rated Voltage	U_C(V) Derating Voltage	Case Code	Nominal Capacitance C_R (μF)	tgδ(%) MAX 25℃ 85℃ 125℃	(Ω) ESR 100Hz
100 (90)	63	0	4.7	6	500
		1	6.8	8	350
		1	10	8	260
		2	15	10	175
		2	22	10	150
		3	33	15	100
		3	47	15	70
		4	68	15	65
		5	100	20	60
		6	150	20	50
		7	220	20	40
125	75	0	0.47	6	4500
		0	0.68	6	3000
		0	1.0	6	1800
		0	1.5	6	1400
		0	2.2	6	1100
		0	3.3	6	700
		1	4.7	6	500
		1	6.8	8	350
		2	10	10	260
		2	15	10	175
		3	22	15	150
		3	33	15	120
		4	47	15	90
		5	68	15	70
		6	100	15	50
		7	150	20	45

P.S. : 1 Please do not use multimeter through the measuring procedures.

2 Capacitance and DF measured at :100Hz , $U_{_}$ =2.2° $_{-1.0}$V , $U_{\sim}$=1.0° $_{0.5}$V, Frequency=100Hz.

Test only applied in series equivalent circuit.

3 Voltage derating is applied at +125℃. (The DCL parameter should be read after 5minuteswhen it connected To the circuit) .

4 Special size and demand could consult with us.