CA38 Series Hermetically Sealed, with GJB Standdarcl , Non-solid Electrolytic Tantalum Capacitor

Brief Introduction

- Tantalum case encapsulation , Hermetically-Sealed , Tubular, Axial-lead , With insulation sleeve , Heteropolarity ;
- Stable in Electrical Characteristics, High reliability, Long life-span, Electrical parameters is alike CLR79 Series products inMIL-PRF-39006/25 CLR81;
- Anti 3V Reverse Voltage & 600mA ~ 2300mA Ripple Current
- Applying in Aerospace Plane , Space Navigation , Satellites, Missiles, Telecommunications, such Electrical Equipments with DC& Impulse Circuit for Military and Civil use;
- Operative Standard: GJB733A-96、QJ/PWV130-2002

Features

- Operaing Temperature Range:-55℃~125℃ (125℃ with rated voltage derating) ;
- Rated Voltage, Derating Voltage, Nominal Capacitance: See figure 2;
- Capacitance tolerance: K : ±10%; M : ±20%;
- DC Leakage at 25℃,85℃,125℃ : See table2;
- Dissipation Factors: Not exceed the parameter in table2;
- Ripple Current: Not exceed the parameterin table2;
- ESR of Negative Temperature: Not exceed the parameter in table2;
- Dimensions & Max Weight : See Table 1 & Figure 1;

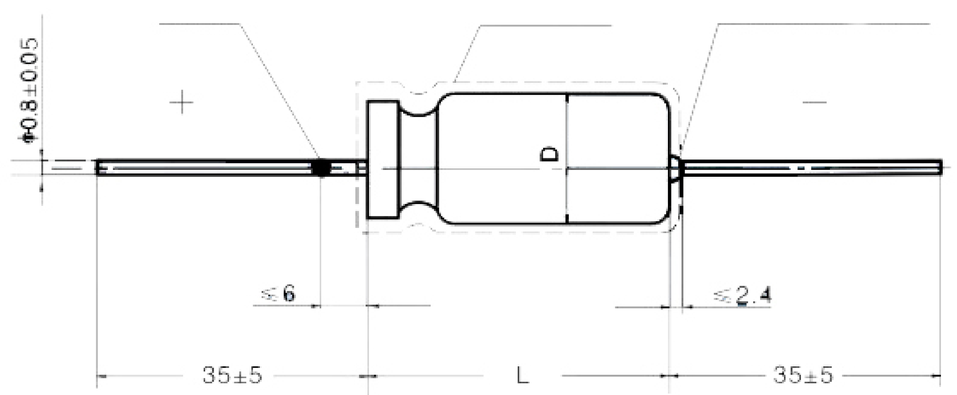

Table1 Dimensions and Max weight

Case Code	Max Weight(g)	with no Insulation Sleeve		with Insulation Sleeve	
		D±0.4 (mm)	$L^{+0.8}_{-0.4}$ (mm)	D_1max (mm)	L_1max (mm)
T1	3.0	4.78	11.51	5.58	14.31
T2	7.0	7.14	16.28	7.94	19.08
T3	12.0	9.52	19.46	10.32	22.26
T4	18.0	9.52	26.97	10.32	29.77

Table2 Electrical Characteristics

U_R(V) Rated Voltage	U_C(V) Derating Voltage	Case Code	Nominal Capacitance C_R (μF)	DCL(μA)		85℃40kHz DC& Ripple Current	(%) 25℃	ESR -55℃ 100Hz
				25℃	85℃ 125℃			
6	4	T1	220	2	9	1000	50	36
		T2	820	3	14	1500	155	18
		T3	1500	5	20	1900	172	18
		T4	2200	6	24	2300	170	13
8	5	T1	180	2	9	1000	41	45
		T2	680	3	14	1500	130	22
		T3	1500	5	20	1900	170	18
		T4	1800	7	25	2300	138	14
10	7	T1	150	2	9	900	34	54
		T2	560	3	16	1450	106	27
		T3	1200	5	20	1850	137	18
		T4	1500	7	25	2300	114	15
15	10	T1	100	2	9	900	30	72
		T2	390	3	16	1450	74	31
		T3	820	6	24	1800	111	22
		T4	1000	8	32	2300	92	17
25	15	T1	68	2	9	850	22	90
		T2	270	3	16	1400	55	33
		T3	560	7	20	1750	76	24
		T4	680	8	32	2100	63	19
30	20	T1	56	2	9	800	22	100
		T2	220	3	16	1200	42	36
		T3	470	8	32	1500	64	25
		T4	560	9	36	2000	55	20
50	30	T1	33	2	9	700	12.3	135
		T2	120	4	24	1200	22.5	49
		T3	270	8	32	1450	37	29
		T4	330	9	36	1900	38	22
60	40	T1	27	3	12	700	10.2	144
		T2	100	4	20	1100	19	54
		T3	220	8	32	1400	30	29
		T4	270	9	36	1850	27	23
75	50	T1	22	3	12	600	8.5	157
		T2	82	4	24	1000	15.2	63
		T3	180	9	36	1380	24.4	30
		T4	220	10	40	1800	37	24
100	65	T1	10	3	12	800	4.5	200
		T2	39	5	24	1300	10.4	80
		T3	68	10	40	1600	11.3	40
		T4	120	12	48	2000	25	30
125	85	T1	6.8	3	12	700	6	300
		T2	27	5	24	1200	7.2	90
		T3	47	10	40	1500	7.9	50
		T4	82	12	48	1900	17.4	32