TMCF13 Polypropylene Film Metae Foit Capacitor (PPI)

Features

- Small size,light weight.
- Excellent frequency and temperature characteristics.
- Epoxy resin vacuum-packed enhances the mechanical strength,humidity resistance.
- Suitable for timing circuit and oscillation circuit.

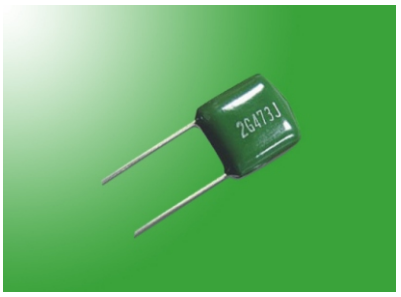

Configuration

Inductive,wound with polypropylene film as the dielectric and aluminum foil
As the electrode,copper-clad steel leads and epoxy resin coating.

Specifications&Outline Drawing

Reference Standard	GB 10188(IEC60384-13)
Climatic Category	40/85/21
Rated Voltage	630V,1000V,1200/1250V
Capacitance Range	0.00022μF~0.1μF
Capacitance Tolerance	±5%(J)，±10%（K）
Voltage Proof	2.5U_R(5S)
Dissipation Factor	≤0.001（20℃,1kHz）
Insulation Resistance (20℃,1min)	≥50000MΩ (20℃ 10V ,1min)

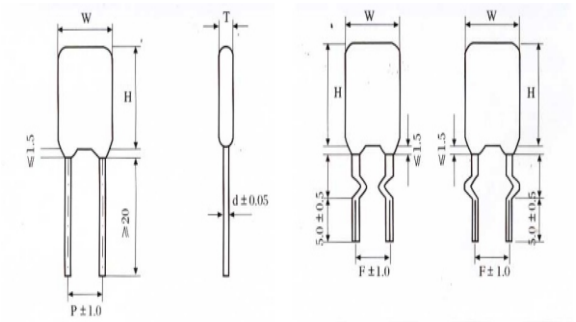

Dimensions

Capacitance μF	630VDC				1000VDC				1200/1250VDC			
	W(max)	H(max)	T(max)	P(±1.0)	W(max)	H(max)	T(max)	P(±1.0)	W(max)	H(max)	T(max)	P(±1.0)
0.00022	6.0	12.0	4.0	4.0	6.5	12.5	5.0	4.0	6.5	12.5	5.0	4.0
0.00027	6.0	12.0	4.0	4.0	6.5	12.5	5.0	4.0	6.5	12.5	5.0	4.0
0.00033	6.0	12.0	4.0	4.0	6.5	12.5	5.0	4.0	6.5	12.5	5.0	4.0
0.00039	6.0	12.0	4.0	4.0	6.5	12.5	5.0	4.0	6.5	12.5	5.0	4.0
0.00047	6.0	12.0	4.0	4.0	6.5	12.5	5.0	4.0	6.5	12.5	5.0	4.0
0.00056	6.0	12.0	4.0	4.0	6.5	12.5	5.0	4.0	6.5	12.5	5.0	4.0
0.00068	6.0	12.0	4.0	4.0	6.5	12.5	5.0	4.0	6.5	12.5	5.0	4.0
0.00082	6.5	12.0	4.5	4.0	7.0	13.0	5.5	4.5	7.0	13.0	5.5	4.5
0.0010	6.5	12.0	4.5	4.0	7.0	13.0	5.5	4.5	7.0	13.0	5.5	4.5
0.0012	7.0	12.0	5.0	4.5	8.0	14.0	6.0	5.0	8.0	14.0	6.0	5.0
0.0015	7.5	12.0	5.0	5.0	8.5	14.0	6.0	5.0	8.5	14.0	6.0	5.0
0.0018	7.5	12.0	5.0	5.0	8.5	14.0	6.0	5.0	8.5	14.0	6.0	5.0
0.0022	8.0	12.0	5.5	5.0	9.0	14.0	6.0	5.0	9.0	14.0	6.0	5.0
0.0027	8.0	13.0	5.5	5.0	9.0	14.0	6.5	6.0	9.0	14.0	6.5	6.0
0.0033	9.0	13.0	5.5	5.5	9.0	15.0	6.5	6.0	9.0	15.0	6.5	6.0
0.0039	9.5	13.0	5.5	6.0	9.5	15.0	7.0	6.0	9.5	15.0	7.0	6.0
0.0047	9.5	13.0	5.5	6.0	10.0	15.5	7.5	6.0	10.0	15.5	7.5	6.0
0.0056	9.5	14.0	5.5	6.0	10.0	16.0	7.5	6.0	10.0	16.0	7.5	6.0
0.0068	9.5	14.0	7.0	6.0	12.0	17.0	8.0	8.0	12.0	16.5	8.0	8.0
0.0082	11.0	15.0	7.0	7.0	13.0	17.0	8.5	8.0	12.5	16.5	8.5	8.0
0.010	11.0	15.0	8.0	7.0	13.0	17.0	8.5	8.0	13.0	17.0	9.0	8.5
0.012	12.0	16.0	8.0	7.0	13.0	18.0	8.5	8.0	13.0	18.0	8.5	8.0
0.015	12.0	16.0	8.0	7.0	14.0	19.0	9.0	9.0	14.0	19.0	9.0	9.0
0.018	12.0	19.0	8.0	7.0	14.0	19.0	9.0	9.0	14.0	19.0	9.0	9.0
0.022	12.0	19.0	8.0	7.0	14.0	19.0	9.0	9.0	14.0	19.0	9.0	9.0
0.027	14.0	21.0	8.0	9.0								
0.033	14.0	21.0	8.0	9.0								
0.039	16.0	22.0	9.5	9.0								
0.047	16.0	22.0	9.5	9.0								